EvacGo

# Intelligent Wall Sounder Interface Module

The Intelligent Sounder Interface Module is designed to allow the use of the Axis-CWS conventional sounder and Axis-CWSV conventional sounder beacon on an EvacGo intelligent loop.

The Axis-WSM module is compatible with intelligent control panels and systems using Axis EN protocol. Easy to install, it incorporates built-in short circuit loop isolation.

Once installed onto an EvacGo intelligent loop, the device is fully addressable and benefits from an extensive range of intelligent control and monitoring functionality.

## Features

- Flexible modular design
- Easy to install
- Manual and auto addressing options
- Built-in short circuit isolators
- Up to 32 tones as standard
- Optional microphone self-test facility
- Addressing using the device programming tool or auto addressing capability via the fire control panel
- Fits EvacGo modular wall sounders and sounder beacons

## Dimensions

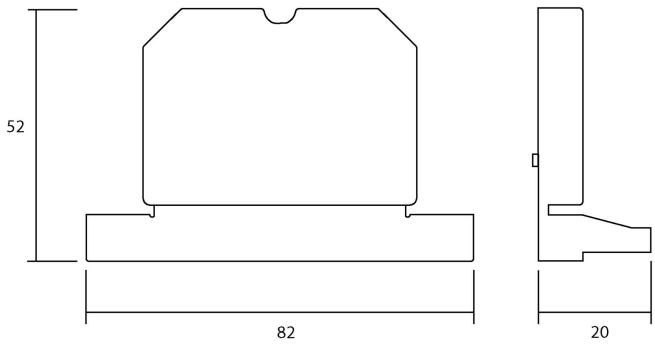


## Standards and Approvals

- EN54-17:2005 Short Circuit Isolators
- EN54-18:2005 Input / Output devices

## Specifications

| | |
|---|---|
| Power supply voltage range | 15 Vdc - 40 Vdc |
| Maximum alarm current consumption | 5-8 mA with sounder / 12-28 mA with beacon |
| Operating temperature range | -10°C to +55°C |
| Weight including back box | 27 g |
| Max tolerated humidity | 85% RH (non-condensing) |
| IP rating | IP20 |

## Order Codes and Options

| | |
|---|---|
| Axis-WSM | Addressable sounder interface module |
| Axis-CWS or Axis-CWS/W | Open area conventional wall sounder - Red or White |
| Axis-CWSV or Axis-CWSV/W | open area conventional wall sounder beacon - Red or White |

Advanced, The Bridges, Balliol Business Park, Newcastle upon Tyne, NE12 8EW, UK T: +44 (0)345 894 7000 E: enquiries@advancedco.com
W: www.advancedco.com

As our policy is one of constant product improvement the right is therefore reserved to modify product specifications without prior notice.